VA9208-xxx-x Series Electric Spring Return Valve Actuators

Product Bulletin

VA9208-GGx-x, VA9208-AGx-x, VA9208-Bxx-x

LIT-12011622
Issued October 2025

The VA9208-xxx-x Series Electric Spring Return Valve Actuators are direct-mount valve actuators. These bidirectional actuators are used to provide accurate positioning on Johnson Controls® VG1000 Series 1-1/4, 1-1/2, and 2 in. (DN32, DN40, and DN50) ball valves in Heating, Ventilating, and Air Conditioning (HVAC) applications. A mechanical spring return system provides rated torque with and without power applied to the actuator. The series includes the following control responses:

- On/Off, 24 V, 120 VAC, 230 VAC power
- On/Off and Floating Point, 24 V power
- Proportional, 24 V power, for 0(2) to 10 VDC or 0(4) to 20 mA Control Signal

Optional line voltage auxiliary switches indicate an endoscope position or perform switching functions within the selected rotation range.

Figure 1: VA9208 Spring Return Electric Valve Actuator

Table 1: Features and Benefits (Part 1 of 2)

Features	Benefits
Direct Mounting with a Single Screw	Reduces installation time and cost.
Electronic Stall Detection	Protects from overload at all angles of rotation. Power consumption is reduced holding mode. The actuator may be stalled anywhere in its rotation range without the need for mechanical end switches.
Double-Insulated Construction	Eliminates need for electrical ground connection for regulatory agency compliance.
Microprocessor-Controlled Brushless DC Motor (-AGx and -GGx Models)	Provides constant runtime independent of torque and ensures long life.
External Mode Selection Switch (-AGx and -GGx Models)	Permits control logic reversal for Floating Control (-AGx Models). Permits calibration input signal range selection, and control logic reversal for Proportional Control (-GGx Models).
Integral Cables with Colored and Numbered Conductors	Simplify installation and field wiring.
Integral Connectors for 3/8 in. (10 mm) Flexible Metal Conduit (FMC)	Simplify installation and field wiring.
Optional Integrated Auxiliary Switches	Provide two integrated line-voltage-capable Single-Pole, Double-Throw (SPDT) switches (one fixed and one adjustable switch point) that factuality safety interfacing or signaling.
Plenum Rated Models	Enable use in other environmental air spaces (plenums) in accordance with section 300.22(C) of the National Electric Code.
Optional Thermal Barrier	Provides for 284°F (140°C) hot water or 15 psi saturated steam applications.
Available Weather Shield for Field Mounting	Provides NEMA 3R protection for the actuator.

Table 1: Features and Benefits (Part 2 of 2)

Features	Benefits
Locking Manual Override with Auto Release and Crank Storage	Allows manual positioning of the actuator hub with automatic return to normal operation when power and the control signal are restored.
Override Control (Proportional Model Only)	Supports control systems override application through field wiring.
Underwriters Laboratories Inc.® (UL), CE Mark, and C-Tick Compliance	Provides internationally recognized regulatory agency appovals.
Manufactured under International Standards Organization (ISO) 9001 Quality Control Standards	Ensures quality.
5-Year Warranty	Protects consumer investment.

IMPORTANT: Use these VA9208-xxx-x Series Electric Spring Return Actuators only to control equipment under normal operating conditions. Where failure or malfunction of the electric actuator could lead to personal injury or property damage to the controlled equipment or other property, additional precautions must be designed into the control system. Incorporate and maintain other devices, such as supervisory or alarm systems or safety or limit controls, intended to warn of or protect against failure or malfunction of the electric actuator.

IMPORTANT: Before specifying VA9208-xxx-x Series Electric Spring Return Actuators for plenum applications, verify acceptance of exposed plastic materials in plenum areas with the local building authority. Building codes for plenum requirements vary by location. Some local building authorities accept compliance to UL 1995, Heating and Cooling Equipment, whereas others use different acceptance criteria.

VA9208-GGx-x Series Proportional Actuators

The VA9208-GGx-x Series Actuators provide proportional modulation of VG1000 1-1/4, 1-1/2, and 2 inch ball valves in HVAC systems that are controlled by an electronic controller or positioner. The actuator responds to 0 to 10 VDC or 2 to 10 VDC control signals. With the addition of a 500 ohm resistor, the actuator responds to a 0 to 20 mA or 4 to 20 mA signal. A 0 to 10 VDC or 2 to 10 VDC feedback signal indicates position and provides support for master-subordinate applications.

The VA9208-GGA-2 actuators include plenum-rated cables and are specially configured for installation in spaces used for environmental air-handling purposes, other than ducts and plenums, as specified in National Fire Protection Association (NFPA) 70: National Electrical Code section 300.22(C), Other Space Used for Environmental Air. The space over a hung ceiling, when used for environmental air handling purposes, is an example of the type of space for which these actuators are configured.

VA9208-AGx-x Series On/Off and Floating Point Actuators

The VA9208-AGx-x Series Actuators provide on/off control or modulation of VG1000 1-1/4, 1-1/2, and 2 inch ball valves in HVAC systems. Floating point control can be provided from a triac or relay. On/off control can be provided from a manual switch, controller, auxiliary switch from a fan motor contactor, or similar device.

The VA9208-AGA-2 actuators include plenum-rated cables and are specially configured for installation in spaces used for environmental air-handling purposes other than ducts and plenums as specified in National Fire Protection Association (NFPA) 70: National Electrical Code section 300.22(C), Other Space Used for Environmental Air. The space over a hung ceiling, when used for environmental air handling purposes, is an example of the type of space for which these actuators are configured.

VA9208-Bxx-3 Series On/Off Actuators

The VA9208-Bxx-3 Series Actuators provide on/off control of VG1000 1-1/4, 1-1/2, and 2 inch ball valves in HVAC systems. On/off control can be provided from a manual switch, controller, auxiliary switch from a fan motor contactor, or similar device.

Operation

VA9208-xxx-x Series Actuators provide 95°of rotation. A graduated scale from 0% to 100% and a position indicator provide visual indication of stroke. A manual override allows manual positioning and temporary locking of the actuator output hub. Restoring power and control signal to the actuator automatically releases the manual override the first time the actuator is commanded to advance past the locked position. When power fails during service, the mechanical spring return system returns the valve to the home position.

VA9208-GGx-x Series Proportional Actuators

The VA9208-GGx-x Series uses a brushless DC motor controlled by a microprocessor. The microprocessor drives the motor at constant speed, independent of torque. The microprocessor also monitors the brushless DC motor's rotation to prevent damage to the actuator in a stall condition. The actuator can be stalled anywhere within its rotation range without the need for mechanical end switches. Power consumption is reduced in the holding mode.

The VA9208-GGC-3 version is provided with two integrated, line-voltage-capable auxiliary SPDT switches. The Switch S1 switch point is fixed at 83% closing, while the Switch S2 switch point is independently and continuously adjustable from 74% to 5%. Auxiliary switches are double-insulated so an electrical ground is not required.

VA9208-AGx-x Series On/Off and Floating Point Actuators

The VA9208-AGx-x Series uses a brushless DC motor controlled by a microprocessor. The microprocessor drives the motor at constant speed, independent of torque. The microprocessor also monitors the brushless DC motor's rotation to prevent damage to the actuator in a stall condition. The actuator can be stalled anywhere within its rotation range without the need for mechanical end switches. Power consumption is reduced in the holding mode.

The VA9208-AGC-3 version is provided with two integrated, line-voltage-capable auxiliary SPDT switches. The Switch S1 switch point is fixed at 83% closing, while the Switch S2 switch point is independently and continuously adjustable from 74% to 5%. Auxiliary switches are double-insulated so an electrical ground is not required.

VA9208-Bxx-3 Series On/Off Actuators

The VA9208-Bxx-3 Series uses a DC brush motor controlled by analog electronics. The actuator can be stalled anywhere within its rotation range without the need for mechanical end switches. Power consumption is reduced in the holding mode. Three different voltage ratings are available for On/Off Actuators.

- VA9208-BGx-3: AC 24 V 50/60 Hz or DC 24 V power
- VA9208-BAx-3: AC 120 V 50/60 Hz power
- VA9208-BDx-3: AC 230 V 50/60 Hz power

The VA9208-BAx-3 and VA9208-BDx-3 actuators are double-insulated so an electrical ground is not required.

The VA9208-BxC-3 versions are provided with two integrated, line-voltage-capable auxiliary SPDT switches. The Switch S1 switch point is fixed at 83% closing, while the Switch S2 switch point is independently and continuously adjustable from 74% to 5%. Auxiliary switches are double-insulated so an electrical ground is not required.

Wiring Diagrams

VA9208-GGx-x Series Proportional Actuators

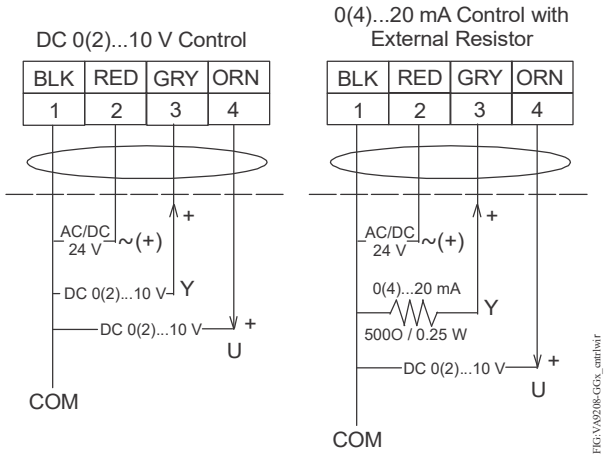

Figure 2: VA9208-GGx-x Control Wiring Diagrams

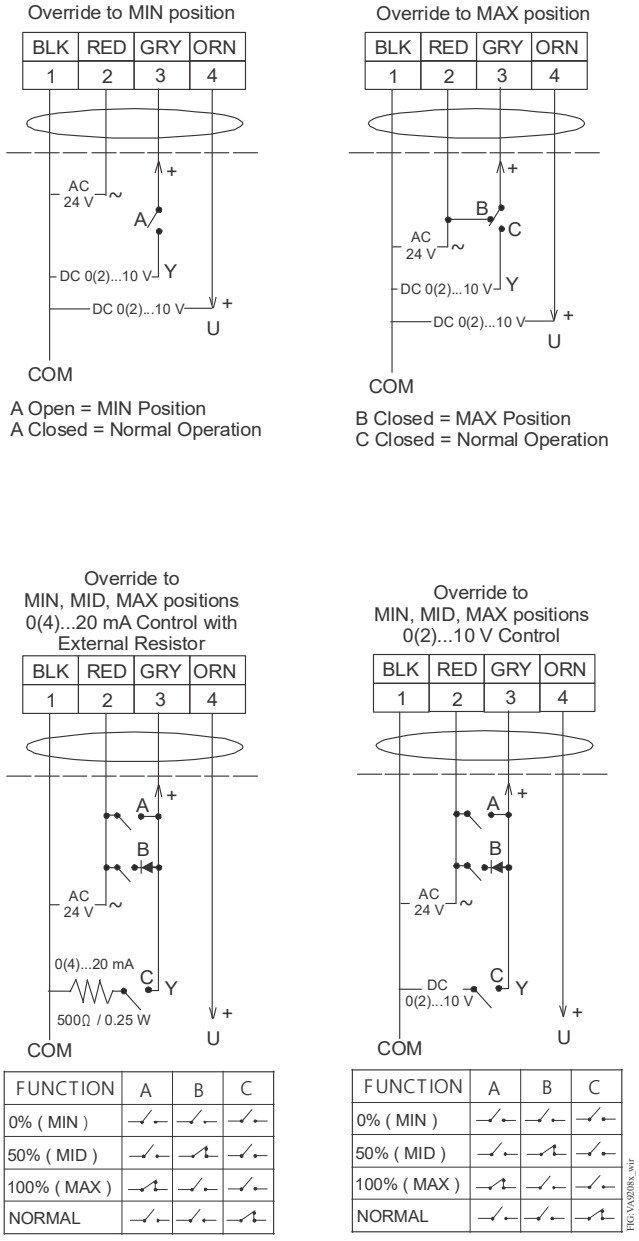

FUNCTION	A	B	C
0% (MIN)			
50% (MID)			
100% (MAX)			
NORMAL			

FUNCTION	A	B	C
0% (MIN)			
50% (MID)			
100% (MAX)			
NORMAL			

Figure 3: VA9208-GGx Control Wiring Diagram (Overrides)

VA9208-Bxx-3 Series On/Off Actuators

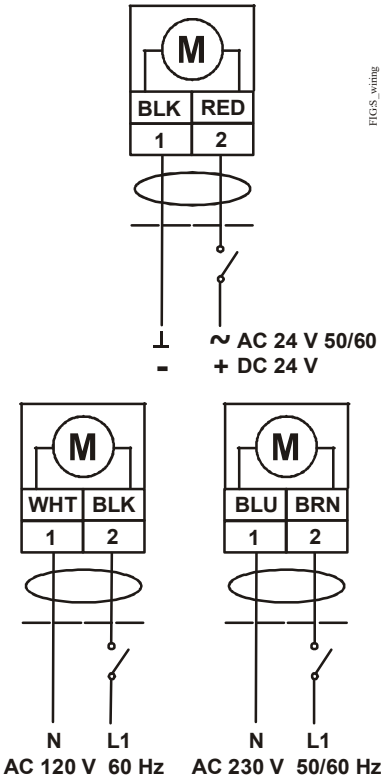

Figure 4: VA9208-Bxx-3 Control Wiring Diagrams

VA9208-xxx-x Auxiliary Switches

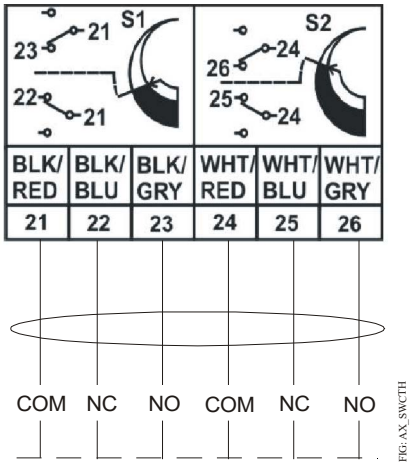

Figure 5: VA9208-xxx-x Auxiliary Switch Wiring Diagram

VA9208-AGx-x Series On/Off and Floating Point Actuators

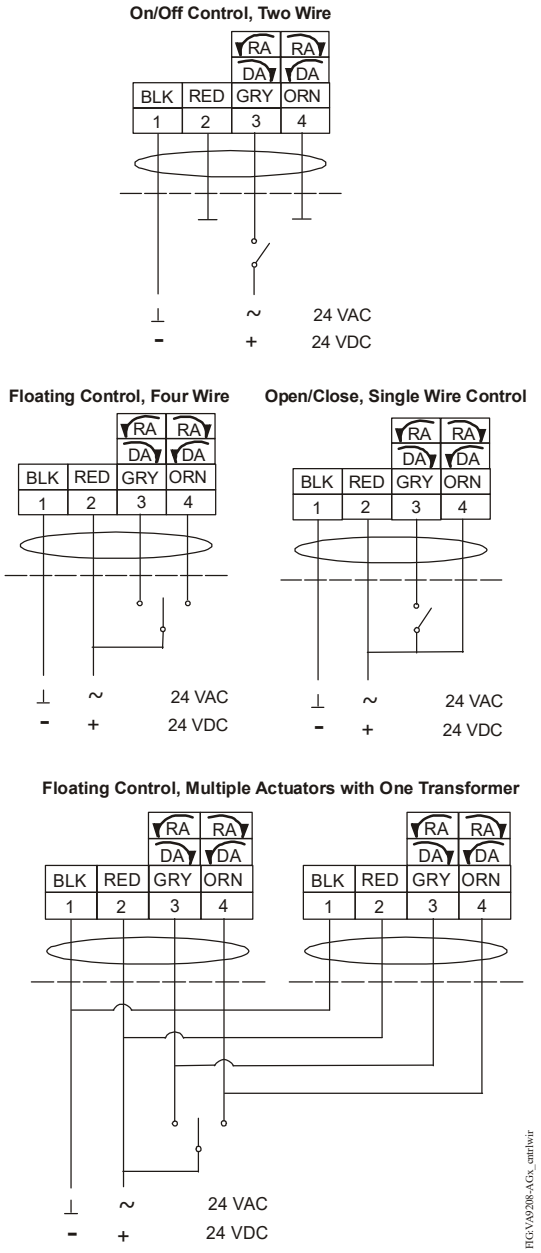

Figure 6: VA9208-AGx-x Control Wiring Diagrams

Repair Information

A number of replacement parts are available; see Table 3 for more details. If a VA9208-xxx-x Series Electric Spring Return Actuator fails to operate within its specifications, replace the unit. For a replacement electric actuator, contact the nearest Johnson Controls® representative.

Ordering Information

Table 2 shows the VA9208-xxx-x Series Electric Spring Return Valve Actuator models.

Table 2: VA9208-xxx-x Series Electric Spring Return Valve Actuator Models

Code Number	Rotation Time (sec)	For 90°	Power Requirement				Power Consumption			Input Signal			Position Feedback	Auxiliary Switches	Electrical Connection		
	Power On (Running)	Power Off (Spring Return)	24 VAC +/- 25% VDC +20%/-10%	24 VAC +/- 20% VDC +20%/-10%	120 VAC +/- 10%	230 VAC +/- 10%	VA Rating, Transformer Sizing	VA: Running (Holding)	Amperage: Running (Holding)	On/Off	Floating Point	0(2) to 10 VDC 0(4) to 20 mA (with 500 ohm resistor)	0(2) to 10 VDC	2 SPDT, 5.0 A (2.9 A Inductive) at 240 V	48 in. (1.2 m) 18 AWG Appliance Cable	120 in. (3.05 m) 19 AWG Plenum Cable	Integral 3/8 in. FMC Connectors
VA9208-AGA-2	150	17 to 25[1]		X			8	7.9 (5.5)		X	X					X	X
VA9208-AGA-3	150	17 to 25[1]		X			8	7.9 (5.5)		X	X				X		X
VA9208-AGC-3	150	17 to 25[1]		X			8	7.9 (5.5)		X	X			X	X		X
VA9208-BGA-3	55 to 71	13 to 26[2]	X				7	6.1 (1.2)		X					X		X
VA9208-BGC-3	55 to 71	13 to 26[2]	X				7	6.1 (1.2)		X				X	X		X
VA9208-BAA-3	55 to 71	13 to 26[2]			X				0.05 (0.03)	X					X		X
VA9208-BAC-3	55 to 71	13 to 26[2]			X				0.05 (0.03)	X				X	X		X
VA9208-BDA-3	55 to 71	13 to 26[2]				X			0.04 (0.03)	X					X		X
VA9208-BDC-3	55 to 71	13 to 26[2]				X			0.04 (0.03)	X				X	X		X
VA9208-GGA-2	150	17 to 25[1]		X			8	7.9 (5.5)				X	X			X	X
VA9208-GGA-3	150	17 to 25[1]		X			8	7.9 (5.5)				X	X		X		X
VA9208-GGC-3	150	17 to 25[1]		X			8	7.9 (5.5)				X	X	X	X		X

1. 22 seconds nominal at room temperature and rated load, 94 seconds maximum at rated load and -40°F (-40°C).
2. 21 seconds nominal at room temperature and rated load, 39 seconds maximum at rated load and -4°F (-20°C), 108 seconds maximum at 53 lb·in (6 N·m) and -40°F (-40°C).

Accessories

Table 3: Accessories/Repair Parts (Order Separately)

Code Number	Description
M9000-560	Ball Valve Linkage Kit for applying M9203 and M9208 Series Actuators to VG1000 Series Valves (Quantity 1)
M9000-561	Thermal Barrier Extends M(VA)9104, M(VA)9203, M(VA)9208, and M(VA)9308/9310 Series Electric Actuator Applications to Include Low Pressure Steam (Quantity 1)
M9000-342	Weathershield Kit for VG1000 Series Ball Valve application of VA9104, VA9203, VA9208, VA9308, and VA9310 Series Electric Actuators (Quantity 1)
M9220-604	Replacement Manual Override Cranks with Long Crank Radius: 2.83 in. (72 mm) (Quantity 5)
M9208-605	Replacement Manual Override Cranks with Short Crank Radius: 1.83 in. (46.5 mm) (Quantity 5)
M9000-700	Universal Ball Valve Linkage (Quantity 1)

Dimensions

See Figure 7 and Table 4 for valve actuator dimensions.

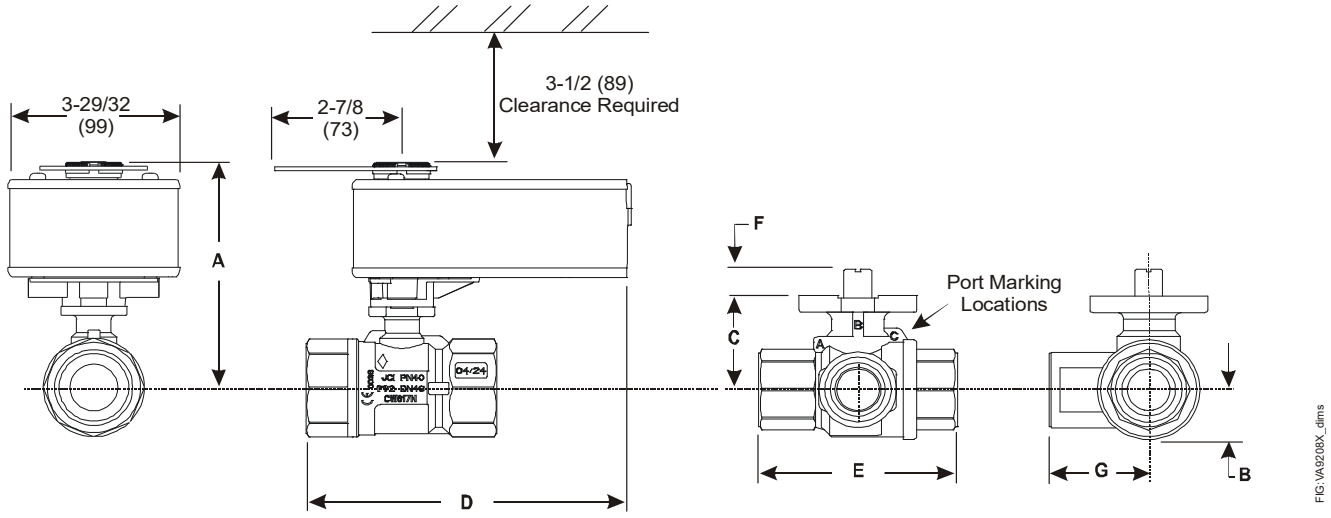

Figure 7: Spring Return VA9208 Actuated VG1245 and VG1845 Series Ball Valve Dimensions, in. (mm)

Table 4: VA9208 Actuated VG1245 and VG1845 Series Ball Valve Dimensions, in. (mm)

Valve Size in. (DN)	Valve Style[1]	A	B	C	D	E	F	G
1-1/4 (DN32)	All	5-5/32 (131)	1-1/32 (26)	1-23/32 (44)	7-5/32 (182)	3-15/16 (100)	11/32 (9)	1-31/32 (50)
1-1/2 (DN40)	All	5-5/16 (135)	1-9/64 (29)	1-57/64 (48)	7-3/8 (187)	4-21/64 (110)	11/32 (9)	2-11/64 (55)
2 (DN50)	2-way	5-17/32 (140)	1-15/32 (37)	2-1/8 (54)	7-19/32 (193)	4-27/32 (123)	11/32 (9)	2-27/64 (62)
	3-way				7-7/8 (200)			

1. Port A must always be connected to the coil (Figure 7).

See Figure 8 and Table 5 for valve actuator dimensions with optional M9000-561 Thermal Barrier installed.

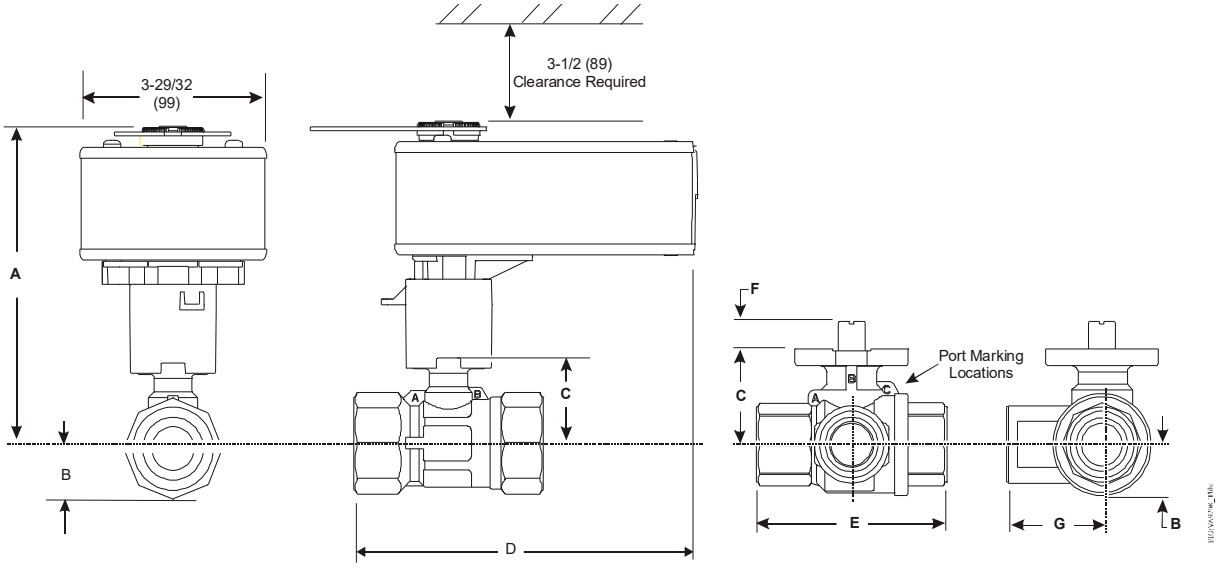

Figure 8: Spring Return VA9208 Actuated VG1245 and VG1845 Series Ball Valve with Optional M9000-561 Thermal Barrier Installed Dimensions, in. (mm)

Table 5: VA9208 Actuated VG1245 and VG1845 Series Ball Valve with Optional M9000-561 Thermal Barrier Installed Dimensions, in. (mm)

Valve Size in. (DN)	Valve Style[1]	A	B	C	D	E	F	G
1-1/4 (DN32)	All	9-17/64 (235)	1-1/32 (26)	1-23/32 (44)	7-1/4 (184)	3-15/16 (100)	11/32 (9)	1-31/32 (50)
1-1/2 (DN40)	All	9-15/16 (240)	1-9/64 (29)	1-57/64 (48)	7-7/16 (189)	4-21/64 (110)	11/32 (9)	2-11/64 (55)
2 (DN50)	2-way	9-31/32 (244)	1-15/32 (37)	2-1/8 (54)	7-11/16 (195)	4-27/32 (123)	11/32 (9)	N/A
	3-way				7-7/8 (200)			2-27/64 (62)

1. Port A must always be connected to the coil (Figure 8).

Technical Specifications

VA9208-GGx-x Series Proportional Electric Spring Return Actuator (Part 1 of 2)

Power Requirements	**-GGx Models**	AC 24 V (AC 19.2 V to 28.8 V) at 50/60 Hz: Class 2 (North America) or Safety Extra-Low Voltage (SELV) (Europe), 7.9 VA Running, 5.5 VA Holding Position DC 24 V (DC 21.6 V to 28.8 V): Class 2 (North America) or SELV (Europe) 3.5 W Running, 1.9 W Holding Position Minimum Transformer Size: 8 VA per Actuator
Input Signal/ Adjustments	**-GGx Models**	Factory Set at DC 0 to 10 V, CW Rotation with Signal Increase Selectable DC 0 (2) to 10 V or 0 (4) to 20 mA with Field -Furnished 500 ohm 0.25 W Minimum Resistor; Switch Selectable Direct or Reverse Action with Signal Increase
Control Input Impedance	**-GGx Models**	Voltage Input: 100,000 ohm Current Input: 500 ohm with Field Furnished 500 ohm Resistor
Feedback Signal	**-GGx Models**	DC 0 (2) to 10 V for Desired Rotation Range up to 95° Corresponds to Rotation Limits, 0.5 mA at 10 V Maximum
Auxiliary Switch Rating	**-xxC Models**	Two Single-Pole, Double-Throw (SPDT), Double-Insulated Switches with Gold over Silver Contacts: AC 24 V, 50 VA Pilot Duty AC 120 V, 5.8 A Resistive, 1/4 hp, 275 VA Pilot Duty AC 240 V, 5.0 A Resistive, 1/4 hp, 275 VA Pilot Duty
Spring Return		Direction is Selectable with Mounting Position of Actuator: Actuator Face Labeled A is Away from Valve: CCW Spring Return Actuator Face Labeled B is Away from Valve: CW Spring Return
Rated Torque	**Power On (Running)**	70 lb·in. (8 N·m) All Operating Temperatures
	Power Off (Spring Returning)	70 lb·in. (8 N·m) All Operating Temperatures
Rotation Range		Maximum Full Stroke: 95° Adjustable Stop: 35° to 95° Maximum Position
Rotation Time for 90 Degrees of Travel	**Power On (Running)**	150 Seconds Constant for 0 to 70 lb·in. (8 N·m) Load, at all Operating Conditions 90 Seconds for 0 to 70 lb·in. (8 N·m) in Calibration Mode or Override Mode
	Power Off (Spring Returning)	17 to 25 Seconds for 0 to 70 lb·in. (8 N·m) Load, at Room Temperature 22 Seconds Nominal at Full Rated Load 94 Seconds Maximum with 70 lb·in. (8 N·m) Load, at -40°F (-40°C)
Life Cycles		60,000 Full Stroke Cycles with 70 lb·in. (8 N·m) Load 1,500,000 Repositions with 70 lb·in. (8 N·m) Load
Audible Noise Rating	**Power On (Running)**	<35 dBA at 70 lb·in. (8 N·m) Load, at a Distance of 39-13/32 in. (1 m)
	Power On (Holding)	<20 dBA at a Distance of 39-13/32 in. (1 m)
	Power Off (Spring Returning)	<52 dBA at 70 lb·in. (8 N·m) Load, at a Distance of 39-13/32 in. (1 m)
Electrical Connections	**GGx-3 Models**	48 in. (1.2 m) UL 758 Type AWM Halogen Free Cable with 18 AWG (0.85 mm^2) Conductors and 1/4 in. (6 mm) Ferrule Ends
	GGx-2 Models	120 in. (3.05 m) UL 444 Type CMP Plenum Rated Cable with 19 AWG (0.75 mm^2) Conductors and 1/4 in. (6 mm) Ferrule Ends
	Auxiliary Switches (-xxC Models)	48 in. (1.2 m) UL 758 Type AWM Halogen Free Cable with 18 AWG (0.85 mm^2) Conductors and 1/4 in. (6 mm) Ferrule Ends
Conduit Connections		Integral Connectors for 3/8 in. (10 mm) Flexible Metal Conduit

VA9208-GGx-x Series Proportional Electric Spring Return Actuator (Part 2 of 2)

Fluid Temperature Limits	**VG12x5 and VG18x5 Series**	-22 to 212°F (-30 to 100°C), Not Rated for Steam Service
	VG12x5 and VG18x5 Series with M9000-561 Thermal Barrier Installed	-22 to 284°F (-30 to 140°C) water; 15 psig (103 kPa) at 250°F (121°C) Saturated Steam
Ambient Conditions	**Standard Operating**	-40 to 140°F (-40 to 60°C); 90% RH Maximum, Noncondensing
	Storage	-40 to 185°F (-40 to 85°C); 95% RH Maximum, Noncondensing
Enclosure Rating		NEMA 2 (IP54) for all Mounting Directions
Compliance	**United States**	UL Listed, CCN XAPX, File E27734; to UL 60730-1A: 2003-08, Ed. 3.1, Automatic Electrical Controls for Household and Similar Use; and UL 60730-2-14: 2002-02, Ed. 1, Part 2 Particular Requirements for Electric Actuators
	Canada	UL Listed, CCN XAPX7, File E27734; to UL 60730-1:02-CAN/CSA: July 2002, 3rd Ed., Automatic Electrical Controls for Household and Similar Use; and CSA C22.2 No. 24-93 Temperature Indicating and Regulating Equipment
CE	**Europe**	CE Mark – Johnson Controls, Inc., declares that this product is in compliance with the essential requirements and other relevant provisions of the EMC Directive and the Low Voltage Directive.
	Australia and New Zealand	RCM Mark, Australia/NZ Emissions Compliant
Shipping Weight	**-GGA Models**	3.5 lb (1.6 kg)
	-GGC Models	3.9 lb (1.8 kg)

VA9208-AGx-x Series On/Off and Floating Point Electric Spring Return Actuators (Part 1 of 2)

Power Requirements	**-AGx Models**	AC 24 V (AC 19.2 V to 28.8 V) at 50/60 Hz: Class 2 (North America) or Safety Extra-Low Voltage (SELV) (Europe), 7.9 VA Running, 5.5 VA Holding Position DC 24 V (DC 21.6 V to 28.8 V): Class 2 (North America) or SELV (Europe) 3.5 W Running, 1.9 W Holding Position Minimum Transformer Size: 8 VA per Actuator
Input Signal/ Adjustments	**-AGx Models**	AC 19.2 to 28.8 V at 50/60 Hz or DC 24 V +20%/-10% Class 2 (North America) or SELV (Europe) Minimum Pulse Width: 500 ms
Control Input Impedance	**-AGx Models**	3,000 ohm Control Inputs
Auxiliary Switch Rating	**-xxC Models**	Two Single-Pole, Double-Throw (SPDT), Double-Insulated Switches with Gold over Silver Contacts: AC 24 V, 50 VA Pilot Duty AC 120 V, 5.8 A Resistive, 1/4 hp, 275 VA Pilot Duty AC 240 V, 5.0 A Resistive, 1/4 hp, 275 VA Pilot Duty
Spring Return		Direction is Selectable with Mounting Position of Actuator: Actuator Face Labeled A is Away from Valve: CCW Spring Return Actuator Face Labeled B is Away from Valve: CW Spring Return
Rated Torque	**Power On (Running)**	70 lb·in. (8 N·m) All Operating Temperatures
	Power Off (Spring Returning)	70 lb·in. (8 N·m) All Operating Temperatures
Rotation Range		Maximum Full Stroke: 95°
Rotation Time for 90 Degrees of Travel	**Power On (Running)**	150 Seconds for 0 to 70 lb·in. (8 N·m) Load, at all Operating Conditions
	Power Off (Spring Returning)	17 to 25 Seconds for 0 to 70 lb·in. (8 N·m) Load, at Room Temperature 22 Seconds Nominal at Full Rated Load 94 Seconds Maximum with 70 lb·in. (8 N·m) Load, at -40°F (-40°C)
Life Cycles		60,000 Full Stroke Cycles with 70 lb·in. (8 N·m) Load 1,500,000 Repositions with 70 lb·in. (8 N·m) Load
Audible Noise Rating	**Power On (Running)**	<35 dBA at 70 lb·in. (8 N·m) Load, at a Distance of 39-13/32 in. (1 m)
	Power On (Holding)	<20 dBA at a Distance of 39-13/32 in. (1 m)
	Power Off (Spring Returning)	<52 dBA at 70 lb·in. (8 N·m) Load, at a Distance of 39-13/32 in. (1 m)
Electrical Connections	**AGx-3 Models**	48 in. (1.2 m) UL 758 Type AWM Halogen Free Cable with 18 AWG ($0.85\ mm^2$) Conductors and 1/4 in. (6 mm) Ferrule Ends
	AGx-2 Models	120 in. (3.05 m) UL 444 Type CMP Plenum Rated Cable with 19 AWG ($0.75\ mm^2$) Conductors and 1/4 in. (6 mm) Ferrule Ends
	Auxiliary Switches (-xxC Models)	48 in. (1.2 m) UL 758 Type AWM Halogen Free Cable with 18 AWG ($0.85\ mm^2$) Conductors and 1/4 in. (6 mm) Ferrule Ends
Conduit Connections		Integral Connectors for 3/8 in. (10 mm) Flexible Metal Conduit
Fluid Temperature Limits	**VG12x5 and VG18x5 Series**	-22 to 212°F (-30 to 100°C), Not Rated for Steam Service
	VG12x5 and VG18x5 Series with M9000-561 Thermal Barrier Installed	-22 to 284°F (-30 to 140°C) water; 15 psig (103 kPa) at 250°F (121°C) Saturated Steam

VA9208-AGx-x Series On/Off and Floating Point Electric Spring Return Actuators (Part 2 of 2)

Ambient Conditions	**Standard Operating**	-40 to 140°F (-40 to 60°C); 90% RH Maximum, Noncondensing
	Storage	-40 to 185°F (-40 to 85°C); 95% RH Maximum, Noncondensing
Enclosure Rating		NEMA 2 (IP54) for all Mounting Directions
Compliance	**United States**	UL Listed, CCN XAPX, File E27734; to UL 60730-1A: 2003-08, Ed. 3.1, Automatic Electrical Controls for Household and Similar Use; and UL 60730-2-14: 2002-02, Ed. 1, Part 2 Particular Requirements for Electric Actuators
	Canada	UL Listed, CCN XAPX7, File E27734; to UL 60730-1:02-CAN/CSA: July 2002, 3rd Ed., Automatic Electrical Controls for Household and Similar Use; and CSA C22.2 No. 24-93 Temperature Indicating and Regulating Equipment
CE	**Europe**	CE Mark – Johnson Controls, Inc., declares that this product is in compliance with the essential requirements and other relevant provisions of the EMC Directive and the Low Voltage Directive.
	Australia and New Zealand	RCM Mark, Australia/NZ Emissions Compliant
Shipping Weight	**-AGA Models**	3.5 lb (1.6 kg)
	-AGC Models	3.9 lb (1.8 kg)

VA9208-Bxx-x Series On/Off Electric Spring Return Actuator (Part 1 of 2)

Power Requirements	**-BGx Models**	AC 24 V (AC 18 V to 30 V) at 50/60 Hz: Class 2 (North America) or Safety Extra-Low Voltage (SELV) (Europe), 6.1 VA Running, 1.2 VA Holding Position DC 24 V (DC 21.6 V to 28.8 V): Class 2 (North America) or SELV (Europe) 3.5 W Running, 0.5 W Holding Position Minimum Transformer Size: 7 VA per Actuator
	-BAx Models	AC 120 V (AC 102 V to 132 V) at 60 Hz: 0.05 A Running, 0.03 A Holding Position
	-BDx Models	AC 230 V (AC 198 V to 264 V) at 50/60 Hz: 0.04 A Running, 0.03 A Holding Position
Auxiliary Switch Rating	**-xxC Models**	Two Single-Pole, Double-Throw (SPDT), Double-Insulated Switches with Gold over Silver Contacts: AC 24 V, 50 VA Pilot Duty AC 120 V, 5.8 A Resistive, 1/4 hp, 275 VA Pilot Duty AC 240 V, 5.0 A Resistive, 1/4 hp, 275 VA Pilot Duty
Spring Return		Direction is Selectable with Mounting Position of Actuator: Actuator Face Labeled A is Away from Valve: CCW Spring Return Actuator Face Labeled B is Away from Valve: CW Spring Return
Rated Torque	**Power On (Running)**	70 lb·in. (8 N·m) All Operating Temperatures
	Power Off (Spring Returning)	70 lb·in. (8 N·m) at Standard Operating Temperatures 53 lb·in. (6 N·m) at Extended Operating Temperatures
Rotation Range		Maximum Full Stroke: 95°
Rotation Time for 90 Degrees of Travel	**Power On (Running)**	55 to 71 Seconds for 0 to 70 lb·in. (8 N·m) Load, at all Operating Conditions 60 Seconds Nominal at Full Rated Load (0.25 rpm)
	Power Off (Spring Returning)	13 to 26 Seconds for 0 to 70 lb·in. (8 N·m) Load, at Room Temperature 21 Seconds Nominal at Full Rated Load 39 Seconds Maximum with 70 lb·in. (8 N·m) Load, at -4°F (-20°C) 108 Seconds Maximum with 53 lb·in. (6 N·m) Load at -40°F (-40°C)
Life Cycles		60,000 Full Stroke Cycles with 70 lb·in. (8 N·m) Load
Audible Noise Rating	**Power On (Running)**	<47 dBA at 70 lb·in. (8 N·m) Load, at a Distance of 39-13/32 in. (1 m)
	Power On (Holding)	<20 dBA at a Distance of 39-13/32 in. (1 m)
	Power Off (Spring Returning)	<52 dBA at 70 lb·in. (8 N·m) Load, at a Distance of 39-13/32 in. (1 m)
Electrical Connections	**Bxx-3 Models**	48 in. (1.2 m) UL 758 Type AWM Halogen Free Cable with 18 AWG ($0.85\ mm^2$) Conductors and 1/4 in. (6 mm) Ferrule Ends
	Auxiliary Switches (-xxC Models)	48 in. (1.2 m) UL 758 Type AWM Halogen Free Cable with 18 AWG ($0.85\ mm^2$) Conductors and 1/4 in. (6 mm) Ferrule Ends
Conduit Connections		Integral Connectors for 3/8 in. (10 mm) Flexible Metal Conduit
Fluid Temperature Limits	**VG12x5 and VG18x5 Series**	-22 to 212°F (-30 to 100°C), Not Rated for Steam Service
	VG12x5 and VG18x5 Series with M9000-561 Thermal Barrier Installed	-22 to 284°F (-30 to 140°C) water; 15 psig (103 kPa) at 250°F (121°C) Saturated Steam
Ambient Conditions	**Standard Operating**	-4 to 140°F (-20 to 60°C); 90% RH Maximum, Noncondensing
	Extended Operating	-40 to 4°F (-40 to -20°C); 90% RH Maximum, Noncondensing
	Storage	-40 to 185°F (-40 to 85°C); 95% RH Maximum, Noncondensing

VA9208-Bxx-x Series On/Off Electric Spring Return Actuator (Part 2 of 2)

Enclosure Rating		NEMA 2 (IP54) for all Mounting Directions
Compliance	**United States**	UL Listed, CCN XAPX, File E27734; to UL 60730-1A: 2003-08, Ed. 3.1, Automatic Electrical Controls for Household and Similar Use; and UL 60730-2-14: 2002-02, Ed. 1, Part 2 Particular Requirements for Electric Actuators
	Canada	UL Listed, CCN XAPX7, File E27734; to UL 60730-1:02-CAN/CSA: July 2002, 3rd Ed., Automatic Electrical Controls for Household and Similar Use; and CSA C22.2 No. 24-93 Temperature Indicating and Regulating Equipment
CE	**Europe**	CE Mark – Johnson Controls, Inc., declares that this product is in compliance with the essential requirements and other relevant provisions of the EMC Directive and the Low Voltage Directive.
	Australia and New Zealand	RCM Mark, Australia/NZ Emissions Compliant
Shipping Weight	**-BGC Models**	3.8 lb (1.7 kg)
	-BAC and -BDC Models	4.2 lb (1.9 kg)
	-BGA Models	3.4 lb (1.5 kg)
	-BAA and -BDA Models	3.8 lb (1.7 kg)

The performance specifications are nominal and conform to acceptable industry standards. For application at conditions beyond these specifications, consult the local Johnson Controls office. Johnson Controls, Inc. shall not be liable for damages resulting from misapplication or misuse of its products.

European Single Point of Contact:

JOHNSON CONTROLS
WESTENDHOF 3
45143 ESSEN
GERMANY

NA/SA Single Point of Contact:

JOHNSON CONTROLS
507 E MICHIGAN ST
MILWAUKEE WI 53202
USA

APAC Single Point of Contact:

JOHNSON CONTROLS
C/O CONTROLS PRODUCT MANAGEMENT
NO. 22 BLOCK D NEW DISTRICT
WUXI JIANGSU PROVINCE 214142
CHINA

Building Technologies & Solutions
507 E. Michigan Street, Milwaukee, WI 53202

Johnson Controls® is a registered trademarks of Johnson Controls.
All other marks herein are the marks of their respective owners. © 2025 Johnson Controls.