VA9203-xxx-xx Series Electric Spring Return Valve Actuators

Product Bulletin

VA9203-GGx-2Z, VA9203-AGx-2Z, VA9203-Bxx-2

LIT-12011702
Issued October 2025

The VA9203-xxx-xx Series Electric Spring Return Valve Actuators are direct-mount valve actuators. These bidirectional actuators are used to provide accurate positioning on Johnson Controls® VG1000 Series 1/2, 3/4, and 1 in. (DN15, DN20, and DN25) ball valves in Heating, Ventilating, and Air Conditioning (HVAC) applications. A mechanical spring return system provides rated torque with or without power applied to the actuator. The series includes the following control options:

- On/Off, 24 V, or 85 to 264 VAC power
- On/Off and Floating Point, 24 V power
- Proportional, 24 V power, for 0(2) to 10 VDC or 0(4) to 20 mA Control Signal

An accessory crankarm and remote mounting kit are available for applications where the actuator cannot be direct-coupled to the damper shaft. An optional line voltage auxiliary switch indicates an end-stop position or performs switching functions within the selected rotation range.

Figure 1: VA9203 Spring Return Electric Valve Actuator

Table 1: Features and Benefits (Part 1 of 2)

Features	Benefits
Direct Mounting with a Single Screw	Reduces installation time and cost.
Electronic Stall Detection	Protects from overload at all angles of rotation. Power consumption is reduced holding mode. The actuator may be stalled anywhere in its rotation range without the need for mechanical end switches.
Double-Insulated Construction	Eliminates need for electrical ground connection for regulatory agency compliance.
Microprocessor-Controlled Brushless DC Motor (-AGx and -GGx Models)	Provides constant runtime independent of torque and ensures long life.
External Mode Selection Switch (-AGx and -GGx Models)	Permits control logic reversal for Floating Control (-AGx Models). Permits calibration input signal range selection, and control logic reversal for Proportional Control (-GGx Models).
Integral Cables with Colored and Numbered Conductors	Simplify installation and field wiring.
Integral 1/2 in. (13 mm) Threaded Conduit Connector(s)	Simplify installation and field wiring.
Optional Integrated Auxiliary Switch	Provides adjustable switch point with line voltage capability.
Plenum Rated Models	Enable use in other environmental air spaces (plenums) in accordance with section 300.22(C) of the National Electric Code.

Table 1: Features and Benefits (Part 2 of 2)

Features	Benefits
Optional Thermal Barrier	Provides for 284°F (140°C) hot water or 15 psi saturated steam applications.
Available Weather Shield for Field Mounting	Provides NEMA 3R protection for the actuator.
Override Control (Proportional Models Only)	Supports manual control system override application through field wiring.
Underwriters Laboratories Inc.® (UL), CE Mark, and C-Tick Compliance	Provides internationally recognized regulatory agency approvals.
Manufactured under International Standards Organization (ISO) 9001 Quality Control Standards	Ensures quality.
5-Year Warranty	Protects consumer investment.

IMPORTANT: Use these VA9203-xxx-xx Series Electric Spring Return Actuators only to control equipment under normal operating conditions. Where failure or malfunction of the electric actuator could lead to personal injury or property damage to the controlled equipment or other property, additional precautions must be designed into the control system. Incorporate and maintain other devices, such as supervisory or alarm systems or safety or limit controls, intended to warn of or protect against failure or malfunction of the electric actuator.

VA9203-GGx-2Z Series Proportional Actuators

The VA9203-GGx-2Z Series Actuators provide proportional modulation of VG1000 1/2, 3/4, and 1 inch ball valves in HVAC systems that are controlled by an electronic controller or positioner. The actuator responds to 0 to 10 VDC or 2 to 10 VDC control signals. With the addition of a 500 ohm resistor, the actuator responds to a 0 to 20 mA or 4 to 20 mA signal. A 0 to 10 VDC or 2 to 10 VDC feedback signal indicates position and provides support for master-subordinate applications.

Manual control system override applications are supported through field wiring, and include:

- override to MIN position
- override to MAX position
- override to MIN, MID, and MAX position

The VA9203-GGA-2Z actuators include plenum-rated cables and are specially configured for installation in spaces used for environmental air-handling purposes, other than ducts and plenums, as specified in National Fire Protection Association (NFPA) 70: National Electrical Code section 300.22(C), Other Space Used for Environmental Air. The space over a hung ceiling, when used for environmental air handling purposes, is an example of the type of space for which these actuators are configured.

VA9203-AGx-2Z Series On/Off and Floating Point Actuators

The VA9203-AGx-2Z Series Actuators provide on/off control or modulation of VG1000 1/2, 3/4, and 1 inch ball valves in HVAC systems. Floating point control can be provided from a triac or relay. On/off control can be provided from a manual switch, controller, auxiliary switch from a fan motor contactor, or similar device.

The VA9203-AGA-2Z actuators include plenum-rated cables and are specially configured for installation in spaces used for environmental air-handling purposes other than ducts and plenums as specified in National Fire Protection Association (NFPA) 70: National Electrical Code section 300.22(C), Other Space Used for Environmental Air. The space over a hung ceiling, when used for environmental air handling purposes, is an example of the type of space for which these actuators are configured.

VA9203-Bxx-2 Series On/Off Actuators

The VA9203-Bxx-2 Series Actuators provide on/off control of VG1000 1/2, 3/4, and 1 inch ball valves in HVAC systems. On/off control can be provided from a manual switch, controller, auxiliary switch from a fan motor contactor, or similar device.

Operation

VA9203-xxx-xx Series Actuators provide 95º of rotation. A graduated scale from 0% to 100% and a position indicator provide visual indication of stroke. When power fails during service, the mechanical spring return system returns the valve to the home position.

VA9203-GGx-2Z Series Proportional Actuators

The VA9203-GGx-2Z Series uses a brushless DC motor controlled by a microprocessor. The microprocessor drives the motor at constant speed, independent of torque. The microprocessor also monitors the brushless DC motor's rotation to prevent damage to the actuator in a stall condition. The actuator can be stalled anywhere within its rotation range without the need for mechanical end switches. Power consumption is reduced in the holding mode.

The VA9203-GGC-2Z version is provided with one integrated, line-voltage-capable auxiliary Single-Pole, Double-Throw (SPDT) switch. The switch point is independently and continuously adjustable throughout the full range of actuator stroke. The auxiliary switch is double-insulated so an electrical ground is not required.

VA9203-AGx-2Z Series On/Off and Floating Point Actuators

The VA9203-AGx-2Z Series uses a brushless DC motor controlled by a microprocessor. The microprocessor drives the motor at constant speed, independent of torque. The microprocessor also monitors the brushless DC motor's rotation to prevent damage to the actuator in a stall condition. The actuator can be stalled anywhere within its rotation range without the need for mechanical end switches. Power consumption is reduced in the holding mode.

The VA9203-AGB-2Z version is provided with one integrated, line-voltage-capable auxiliary SPDT switch. The switch point is independently and continuously adjustable throughout the full range of actuator stroke. The auxiliary switch is double-insulated so an electrical ground is not required.

VA9203-Bxx-2 Series On/Off Actuators

The VA9203-Bxx-2 Series uses a DC brush motor controlled by analog electronics. The actuator can be stalled anywhere within its rotation range without the need for mechanical end switches. Power consumption is reduced in the holding mode. Two different voltage ratings are available for on/off actuators.

- VA9203-BGx-2: AC 24 V 50/60 Hz or DC 24 V power
- VA9203-BUx-2: AC 85 to 265 V 50/60 Hz power

The VA9203-BUx-2 actuators are double-insulated so an electrical ground is not required. The VA9203-BxB-2 versions are provided with one integrated, line-voltage-capable auxiliary SPDT switch. The switch point is independently and continuously adjustable throughout the full range of the actuator stroke. The auxiliary switch is double-insulated so an electrical ground is not required.

Wiring Diagrams

VA9203-GGx-2Z Series Proportional Actuators

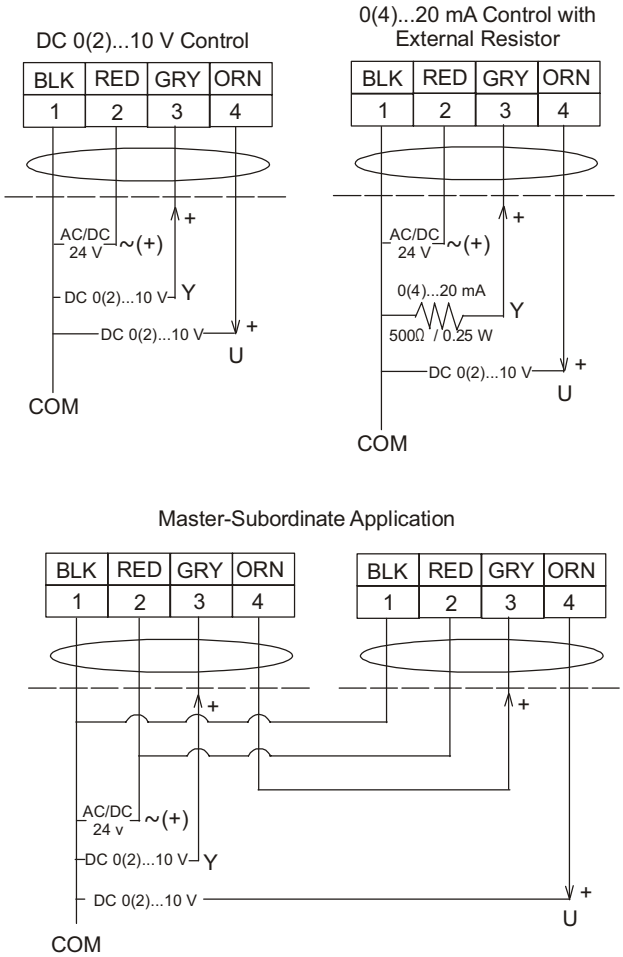

Figure 2: VA9203-GGx-2Z Control Wiring Diagrams

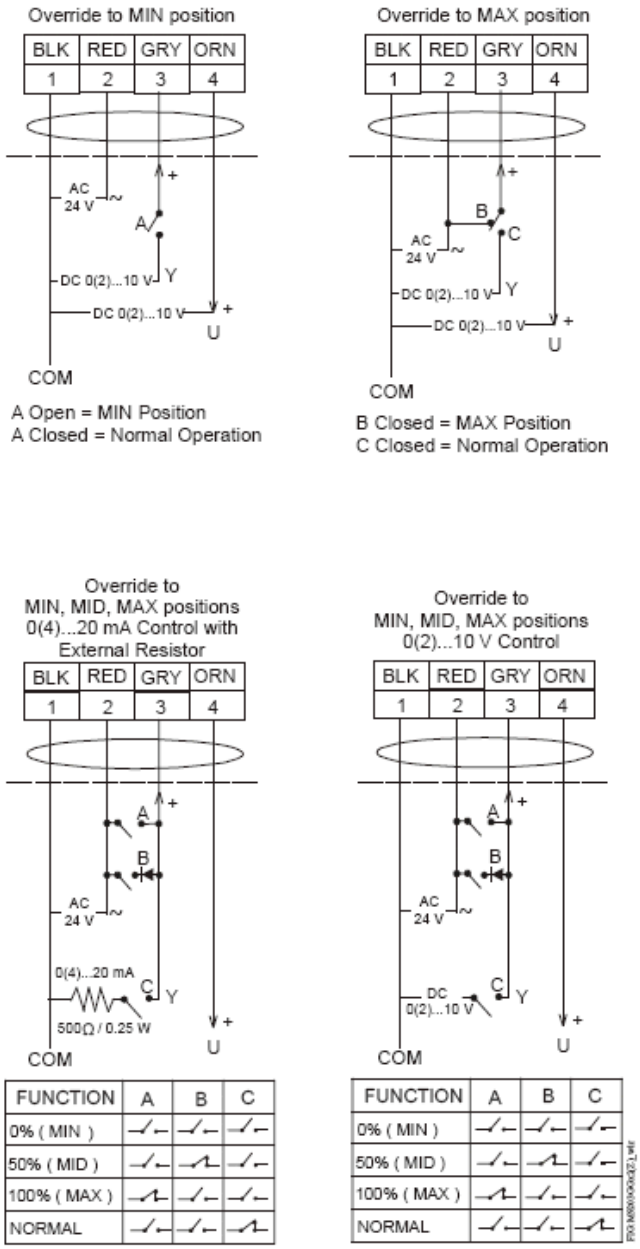

FUNCTION	A	B	C
0% (MIN)			
50% (MID)			
100% (MAX)			
NORMAL			

FUNCTION	A	B	C
0% (MIN)			
50% (MID)			
100% (MAX)			
NORMAL			

Figure 3: Control Wiring Diagrams (Overrides)

VA9203-Bxx-2 Series On/Off Actuators

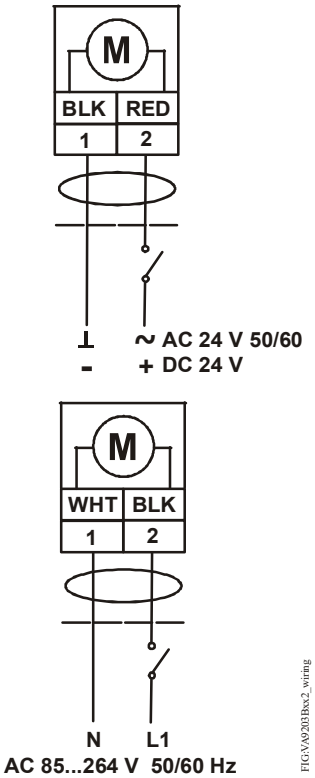

Figure 4: VA9203-Bxx-2 Control Wiring Diagrams

VA9203-xxB-2x Auxiliary Switch

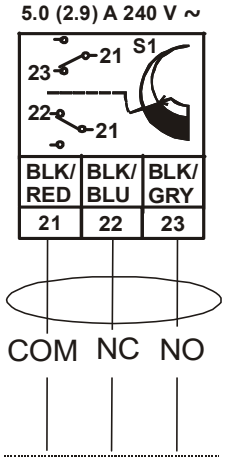

Figure 5: Optional Auxiliary Switch Wiring

VA9203-AGx-2Z Series On/Off and Floating Point Actuators

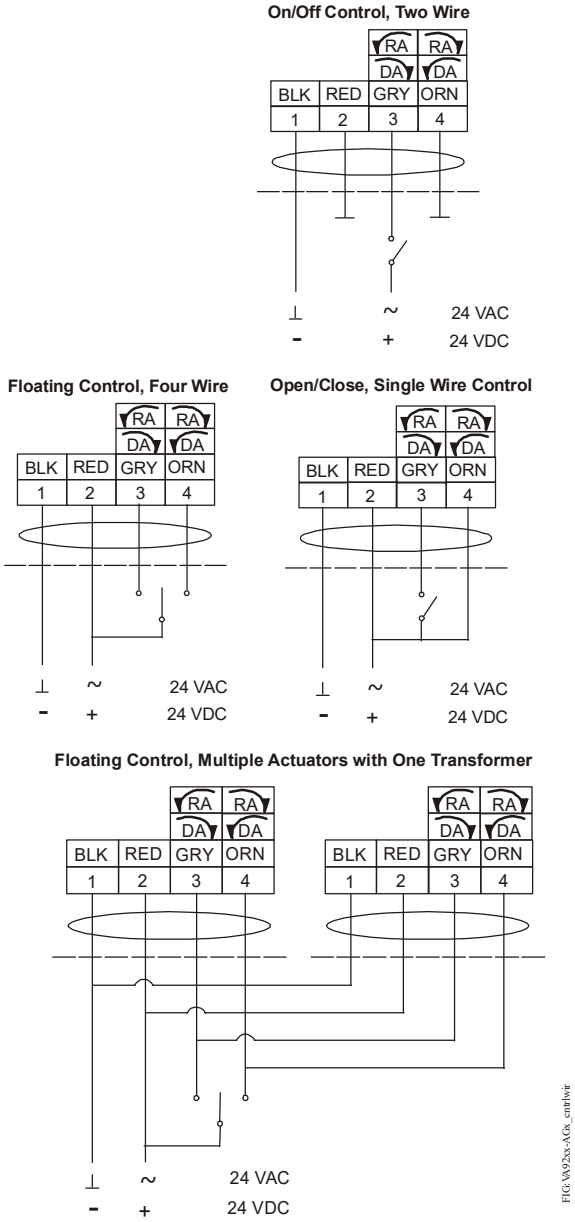

Figure 6: VA9203-AGx-2Z Control Wiring Diagrams

Ordering Information

Table 2 shows the VA9203-xxx-xx Series Electric Spring Return Valve Actuator models.

Table 2: VA9203-xxx-xx Series Electric Spring Return Valve Actuator Models

Code Number	Rotation Time For 90°		Power Requirement		Power Consumption			Input Signal			Position Feedback	Auxiliary Switch	Electrical Connection		
	Power On – Running (Seconds)	Power Off – Spring Return (Seconds)	24 VAC +/- 20% VDC +20%/-10%	85 to 264 VAC +/- 10%	VA Rating, Transformer Sizing	VA: Running (Holding)	Amperage: Running (Holding)	On/Off	On/Off and Floating Point	0(2) to 10 VDC 0(4) to 20 mA (with 500 ohm Resistor)	0(2) to 10 VDC	1 SPDT, 5.0 A (2.9 A Inductive) at 240 V	48 in. (1.2 m) 18 AWG Appliance Cable	120 in. (3.05 m) 19 AWG Plenum Cable	1/2 in. (13 mm) Conduit Connectors
VA9203-AGA-2Z	90	<25	X		6	5.1 (2.8)	–		X					X	X
VA9203-AGB-2Z	90	<25	X		6	5.1 (2.8)	–		X			X	X		X
VA9203-BGA-2	<75	<75	X		6	5.0 (2.5)	–	X					X		X
VA9203-BGB-2	<75	<75	X		6	5.0 (2.5)	–	X				X	X		X
VA9203-BUA-2	<75	<75		X	–	–	0.06 (0.02)	X					X		X
VA9203-BUB-2	<75	<75		X	–	–	0.06 (0.02)	X				X	X		X
VA9203-GGA-2Z	90	<25	X		6	5.1 (2.8)	–			X	X			X	X
VA9203-GGB-2Z	90	<25	X		6	5.1 (2.8)	–			X	X	X	X		X

Accessories

Table 3: Accessories/Repair Parts (Order Separately)

Code Number	Description
M9000-560	Ball Valve Linkage Kit for Applying M9203 and M9208 Series Actuators to VG1000 Series Valves (Quantity 1)
M9000-561	Thermal Barrier Extends M(VA)9104, M(VA)9203, and M(VA)9208 Series Electric Spring Return Actuator Applications to Include Low Pressure Steam (Quantity 1)
M9000-342	Weathershield Kit for VG1000 Series Ball Valve application of VA9104, VA9203, and VA9208 Series Electric Spring Return Actuators (quantity 1)
M9000-607	Position Indicator for VG1000 Series Ball Value Applications (Quantity 5)

Dimensions

See Figure 7, Table 4, and Table 5 for valve actuator dimensions.

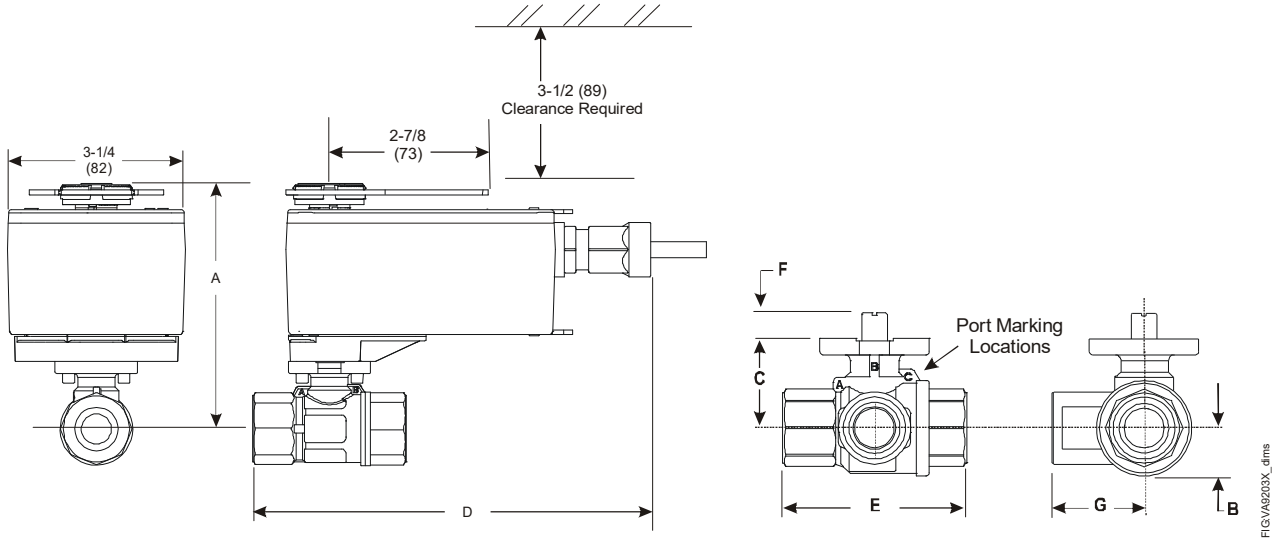

Figure 7: Spring Return VA9203 Actuated VG1245 and VG1845 Series Ball Valve Dimensions, in. (mm)

Table 4: VA9203 Actuated VG1245 and VG1845 Series NPT Ball Valve Dimensions, in. (mm)

Valve Size in. (DN)[1]	A	B	C	D	E	F	G
1/2 (DN15)	4-5/8 (117.3)	21/32 (17)	1-7/32 (31)	6-31/32 (177)	2-33/64 (64)	11/32 (9)	1-1/4 (32)
3/4 (DN20)	4-5/8 (117.3)	21/32 (17)	1-7/32 (31)	7-1/8 (181)	2-51/64 (71)	11/32 (9)	1-13/32 (36)
1 (DN25)	4-11/16 (119)	3/4 (19)	1-19/64 (33)	7-31/64 (190)	3-13/32 (87)	11/32 (9)	1-45/64 (43)

1. Port A must always be connected to the coil.

Table 5: VA9203 Actuated VG1271, VG1275, VG1871, and VG1875 Series Sweat Ball Valve and VA9203 Actuated VG1291, VG1295, VG1891, and VG1895 Series Press Ball Valve Dimensions, in. (mm)

Valve Size, in. (DN)[1]	A	B	C	D	E	F	G
1/2 (DN15)	4-5/8 (117.3)	21/32 (17)	1-7/32 (31)	7-13/64 (183)	3-25/32 (96)	11/32 (9)	1-1/4 (32)
3/4 (DN20)	4-5/8 (117.3)	21/32 (17)	1-7/32 (31)	7-3/4 (197)	4-3/32 (104)	11/32 (9)	1-13/32 (36)
1 (DN25)	4-11/16 (119)	3/4 (19)	1-19/64 (33)	8-3/16 (208)	4-41/64 (118)	11/32 (9)	1-45/64 (43)

1. Port A must always be connected to the coil.

See Figure 8 and Table 6 for valve actuator dimensions with optional M9000-561 Thermal Barrier installed.

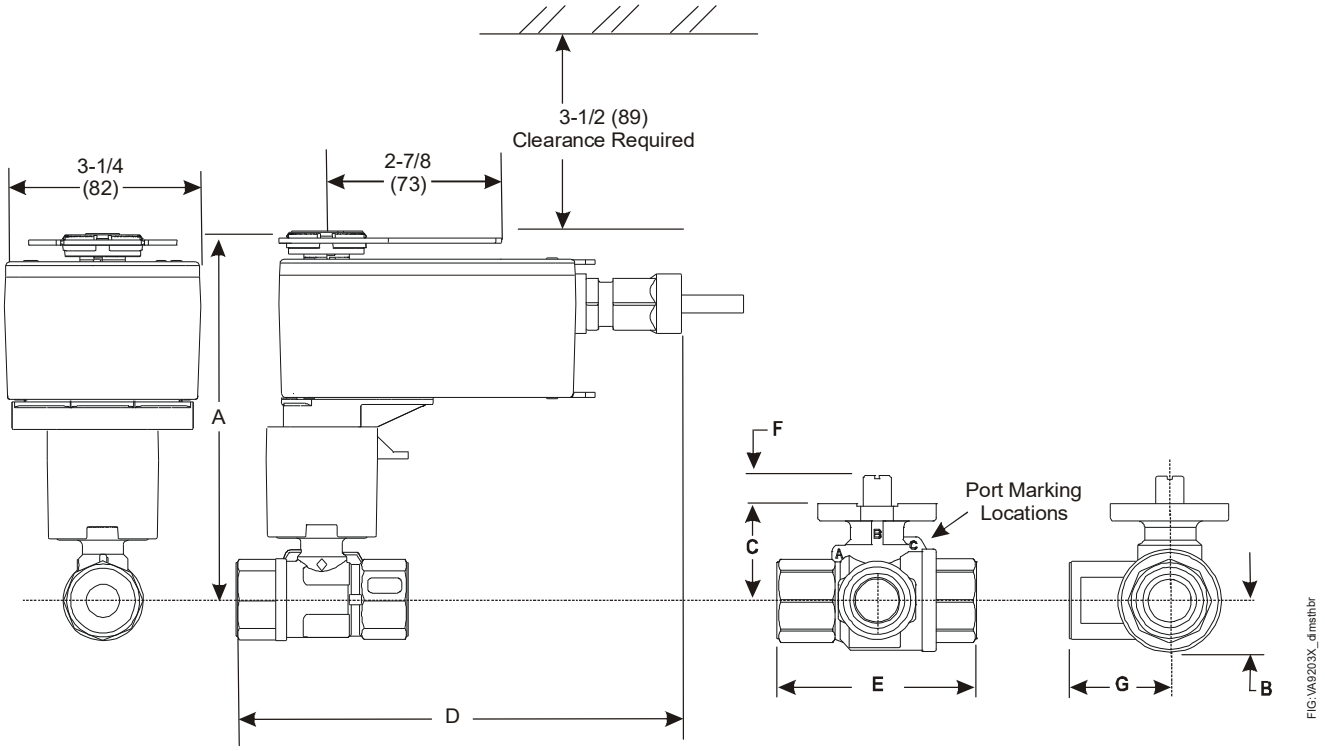

Figure 8: Spring Return VA9203 Actuated VG1245 and VG1845 Series Ball Valve with Optional M9000-561 Thermal Barrier Installed Dimensions, in. (mm)

Table 6: VA9203 Actuated VG1245 and VG1845 Series Ball Valve with Optional M9000-561 Thermal Barrier Installed Dimensions, in. (mm)

Valve Size in. (DN)[1]	A	B	C	D	E	F	G
1/2 (DN15)	6 (152)	21/32 (17)	1-7/32 (31)	6-31/32 (177)	2-33/64 (64)	11/32 (9)	1-1/4 (32)
3/4 (DN20)	6 (152)	21/32 (17)	1-7/32 (31)	7-1/8 (181)	2-51/64 (71)	11/32 (9)	1-13/32 (36)
1 (DN25)	6-1/16 (154)	3/4 (19)	1-19/64 (33)	7-31/64 (190)	3-13/32 (87)	11/32 (9)	1-45/64 (43)

1. Port A must always be connected to the coil.

Repair Information

A number of replacement parts are available; see Table 3 for more details. If a VA9203-xxx-xx Series Electric Spring Return Actuator fails to operate within its specifications, replace the unit. For a replacement electric actuator, contact the nearest Johnson Controls® representative.

Technical Specifications

VA9203-GGx-2Z Series Proportional Electric Spring Return Actuator (Part 1 of 2)

Power Requirements		AC 24 V (AC 19.2 V to 28.8 V) at 50/60 Hz: Class 2 (North America) or Safety Extra-Low Voltage (SELV) (Europe), 4.7 VA Running, 2.7 VA Holding Position DC 24 V (DC 21.6 V to 28.8 V): Class 2 (North America) or SELV (Europe) 1.8 W Running, 1 W Holding Position Minimum Transformer Size: 6 VA per Actuator
Input Signal/Adjustments		Factory Set at DC 0 to 10 V, CW Rotation with Signal Increase Selectable DC 0 (2) to 10 V or 0 (4) to 20 mA with Field -Furnished 500 ohm 0.25 W Minimum Resistor Switch Selectable Direct or Reverse Action with Signal Increase
Control Input Impedance		Voltage Input: 100,000 ohm Current Input: 500 ohm with Field-Furnished 500 ohm Resistor
Feedback Signal		DC 0 (2) to 10 V for Desired Rotation Range up to 95° Corresponds to Rotation Limits, 0.5 mA at 10 V Maximum
Auxiliary Switch Rating	**-xxB Models**	One Single-Pole, Double-Throw (SPDT), Double-Insulated Switch with Silver Contacts: AC 24 V, 50 VA Pilot Duty AC 120 V, 5.8 A Resistive, 1/4 hp, 275 VA Pilot Duty AC 240 V, 5.0 A Resistive, 1/4 hp, 275 VA Pilot Duty
Spring Return		Direction is Selectable with Mounting Position of Actuator: Actuator Face Labeled A is Away from Valve: CCW Spring Return Actuator Face Labeled B is Away from Valve: CW Spring Return
Rated Torque	**Power On (Running)**	27 lb·in (3 N·m) All Operating Temperatures
	Power Off (Spring Returning)	27 lb·in (3 N·m) All Operating Temperatures
Rotation Range		Maximum Full Stroke: 95° Adjustable Stop: 35° to 95° Maximum Position
Rotation Time for 90 Degrees of Travel	**Power On (Running)**	90 Seconds Constant for 0 to 27 lb·in. (3 N·m) Load, at all Operating Conditions
	Power Off (Spring Returning)	12 to 17 Seconds for 0 to 27 lb·in. (3 N·m) Load, at Room Temperature 16 Seconds Nominal at Full Rated Load 22 Seconds Maximum with 27 lb·in. (3 N·m) Load, at -22°F (-30°C)
Life Cycles		60,000 Full Stroke Cycles with 27 lb·in. (3 N·m) Load 1,500,000 Repositions with 27 lb·in. (3 N·m) Load
Audible Noise Rating	**Power On (Running)**	<37 dBA at 27 lb·in. (3 N·m) Load, at a Distance of 39-13/32 in. (1 m)
	Power On (Holding)	<20 dBA at a Distance of 39-13/32 in. (1 m)
	Power Off (Spring Returning)	<56 dBA at 27 lb·in. (3 N·m) Load, at a Distance of 39-13/32 in. (1 m)
Electrical Connections	**-GGA-2Z Models**	120 in. (3.05 m) UL 444 Type CMP Plenum Rated Cable with 19 AWG (0.75 mm^2) Conductors and 1/4 in. (6 mm) Ferrule Ends
	-GGB-2Z Models	48 in. (1.2 m) UL 758 Type AWM Halogen Free Cable with 18 AWG (0.85 mm^2) Conductors and 1/4 in. (6 mm) Ferrule Ends
Conduit Connections		Integral 1/2 in. (13 mm) Threaded Conduit Connector(s)

VA9203-GGx-2Z Series Proportional Electric Spring Return Actuator (Part 2 of 2)

Fluid Temperature Limits	**VG12x5 and VG18x5 Series**	-22 to 212°F (-30 to 100°C), Not Rated for Steam Service
	VG12x5 and VG18x5 Series with M9000-561 Thermal Barrier Installed	-22 to 284°F (-30 to 140°C) water; 15 psig (103 kPa) at 250°F (121°C) Saturated Steam
Ambient Conditions	**Standard Operating**	-22 to 140°F (-30 to 60°C); 90% RH Maximum, Noncondensing
	Storage	-40 to 185°F (-40 to 85°C); 95% RH Maximum, Noncondensing
Enclosure Rating		NEMA 2 (IP54) for all Mounting Directions
Compliance	**United States**	UL Listed, CCN XAPX, File E27734; to UL 60730-1A: 2003-08, Ed. 3.1, Automatic Electrical Controls for Household and Similar Use; and UL 60730-2-14: 2002-02, Ed. 1, Part 2 Particular Requirements for Electric Actuators Plenum Rated (UL 2043). Suitable for use in other environmental air space (plenums) in accordance with Section 300.22 (C) of the National Electric Code
	Canada	UL Listed, CCN XAPX7, File E27734; to UL 60730-1:02-CAN/CSA: July 2002, 3rd Ed., Automatic Electrical Controls for Household and Similar Use; and CSA C22.2 No. 24-93 Temperature Indicating and Regulating Equipment
CE	**Europe**	CE Mark – Johnson Controls declares that this product is in compliance with the essential requirements and other relevant provisions of the EMC Directive 2004/108/EC and Low Voltage Directive 2006/95/EC.
	Australia and New Zealand	RCM Mark, Australia/NZ Emissions Compliant
Shipping Weight	**-GGA Models**	2.0 lb (0.9 kg)
	-GGB Models	2.4 lb (1.1 kg)

VA9203-AGx-2Z Series On/Off and Floating Point Electric Spring Return Actuators (Part 1 of 2)

Power Requirements		AC 24 V (AC 19.2 V to 28.8 V) at 50/60 Hz: Class 2 (North America) or Safety Extra-Low Voltage (SELV) (Europe), 5.1 VA Running, 2.8 VA Holding Position DC 24 V (DC 21.6 V to 28.8 V): Class 2 (North America) or SELV (Europe) 1.9 W Running, 1.1 W Holding Holding Position Minimum Transformer Size: 6 VA per Actuator
Input Signal/Adjustments		AC 19.2 to 28.8 V at 50/60 Hz or DC 24 V +20%/-10% Class 2 (North America) or SELV (Europe) Minimum Pulse Width: 500 ms
Control Input Impedance		4,700 ohm Control Inputs
Auxiliary Switch Rating	**-xxB Models**	One Single-Pole, Double-Throw (SPDT), Double-Insulated Switch with Silver Contacts: AC 24 V, 50 VA Pilot Duty AC 120 V, 5.8 A Resistive, 1/4 hp, 275 VA Pilot Duty AC 240 V, 5.0 A Resistive, 1/4 hp, 275 VA Pilot Duty
Spring Return		Direction is Selectable with Mounting Position of Actuator: Actuator Face Labeled A is Away from Valve: CCW Spring Return Actuator Face Labeled B is Away from Valve: CW Spring Return
Rated Torque	**Power On (Running)**	27 lb·in. (3 N·m) All Operating Temperatures
	Power Off (Spring Returning)	27 lb·in. (3 N·m) All Operating Temperatures
Rotation Range		Maximum Full Stroke: 95°

VA9203-AGx-2Z Series On/Off and Floating Point Electric Spring Return Actuators (Part 2 of 2)

Rotation Time for 90 Degrees of Travel	**Power On (Running)**	90 Seconds Constant for 0 to 27 lb·in. (3 N·m) Load, at all Operating Conditions
	Power Off (Spring Returning)	12 to 17 Seconds for 0 to 27 lb·in. (3 N·m) Load, at Room Temperature 16 Seconds Nominal at Full Rated Load 22 Seconds Maximum with 27 lb·in. (3 N·m) Load, at -22°F (-30°C)
Life Cycles		60,000 Full Stroke Cycles with 27 lb·in. (3 N·m) Load 1,500,000 Repositions with 27 lb·in. (3 N·m) Load
Audible Noise Rating	**Power On (Running)**	<37 dBA at 27 lb·in. (3 N·m) Load, at a Distance of 39-13/32 in. (1 m)
	Power On (Holding)	<20 dBA at a Distance of 39-13/32 in. (1 m)
	Power Off (Spring Returning)	<56 dBA at 27 lb·in. (3 N·m) Load, at a Distance of 39-13/32 in. (1 m)
Electrical Connections	**AGA-2Z Models**	120 in. (3.05 m) UL 444 Type CMP Plenum Rated Cable with 19 AWG ($0.75\ mm^2$) Conductors and 1/4 in. (6 mm) Ferrule Ends
	AGB-2Z Models	48 in. (1.2 m) UL 758 Type AWM Halogen Free Cable with 18 AWG ($0.85\ mm^2$) Conductors and 1/4 in. (6 mm) Ferrule Ends
Conduit Connections		Integral 1/2 in. (13 mm) Threaded Conduit Connectors
Fluid Temperature Limits	**VG12x5 and VG18x5 Series**	-22 to 212°F (-30 to 100°C), Not Rated for Steam Service
	VG12x5 and VG18x5 Series with M9000-561 Thermal Barrier Installed	-22 to 284°F (-30 to 140°C) water; 15 psig (103 kPa) at 250°F (121°C) Saturated Steam
Ambient Conditions	**Standard Operating**	-22 to 140°F (-30 to 60°C); 90% RH Maximum, Noncondensing
	Storage	-40 to 185°F (-40 to 85°C); 95% RH Maximum, Noncondensing
Enclosure Rating		NEMA 2 (IP54) for all Mounting Directions
Compliance	**United States**	UL Listed, CCN XAPX, File E27734; to UL 60730-1A: 2003-08, Ed. 3.1, Automatic Electrical Controls for Household and Similar Use; and UL 60730-2-14: 2002-02, Ed. 1, Part 2 Particular Requirements for Electric Actuators Plenum Rated (UL 2043). Suitable for use in other environmental air space (plenums) in accordance with Section 300.22 (C) of the National Electric Code
	Canada	UL Listed, CCN XAPX7, File E27734; to UL 60730-1:02-CAN/CSA: July 2002, 3rd Ed., Automatic Electrical Controls for Household and Similar Use; and CSA C22.2 No. 24-93 Temperature Indicating and Regulating Equipment
CE	**Europe**	CE Mark – Johnson Controls declares that this product is in compliance with the essential requirements and other relevant provisions of the EMC Directive 2004/108/EC and the Low Voltage Directive 2006/95/EC.
	Australia and New Zealand	RCM Mark, Australia/NZ Emissions Compliant
Shipping Weight	**-AGA Models**	2.0 lb (0.9 kg)
	-AGB Models	2.4 lb (1.1 kg)

VA9203-Bxx-x Series On/Off Electric Spring Return Actuator (Part 1 of 3)

Power Requirements	**-BGx-2 Models**	AC 24 V (AC 19.2 V to 28.8 V) at 50/60 Hz: Class 2 (North America) or Safety Extra-Low Voltage (SELV) (Europe), 5 VA Running, 1.6 VA Holding Position DC 24 V (DC 21.6 V to 28.8 V): Class 2 (North America) or SELV (Europe) 2.8 W Running, 0.8 W Holding Position Minimum Transformer Size: 6 VA per Actuator
	-BUx-2 Models	AC 100 V to 240 V (AC 85 V to 264 V) at 50/60 Hz: 0.06 A Running, 0.02 A Holding Position

VA9203-Bxx-x Series On/Off Electric Spring Return Actuator (Part 2 of 3)

Auxiliary Switch Rating	**-xxB-2 Models**	One Single-Pole, Double-Throw (SPDT), Double-Insulated Switch with Silver Contacts: AC 24 V, 50 VA Pilot Duty AC 120 V, 5.8 A Resistive, 1/4 hp, 275 VA Pilot Duty AC 240 V, 5.0 A Resistive, 1/4 hp, 275 VA Pilot Duty
Spring Return		Direction is Selectable with Mounting Position of Actuator: Actuator Face Labeled A is Away from Valve: CCW Spring Return Actuator Face Labeled B is Away from Valve: CW Spring Return
Rated Torque	**Power On (Running)**	27 lb·in. (3 N·m) All Operating Temperatures
	Power Off (Spring Returning)	27 lb·in. (3 N·m) All Operating Temperatures
Rotation Range		Maximum Full Stroke: 95°
Rotation Time for 90 Degrees of Travel	**Power On (Running) Bxx-2 Models**	53 to 71 Seconds Constant for 0 to 27 lb·in. (3 N·m) Load, at Room Temperature 60 Seconds Nominal at Full Rated Load (0.25 rpm)
	Power Off (Spring Returning)	37 to 46 Seconds for 0 to 27 lb·in. (3 N·m) Load, at Room Temperature 44 Seconds Nominal at Full Rated Load 75 Seconds Maximum with 27 lb·in. (3 N·m) Load at -22°F (-30°C)
Life Cycles		60,000 Full Stroke Cycles with 27 lb·in. (3 N·m) Load
Audible Noise Rating	**Power On (Running)**	<36 dBA at 27 lb·in. (3 N·m) Load, at a Distance of 39-13/32 in. (1 m)
	Power On (Holding)	<20 dBA at a Distance of 39-13/32 in. (1 m)
	Power Off (Spring Returning)	<35 dBA at 27 lb·in. (3 N·m) Load, at a Distance of 39-13/32 in. (1 m)
Electrical Connections	**Actuator (All Models)**	48 in. (1.2 m) UL 758 Type AWM Halogen Free Cable with 18 AWG (0.85 mm^2) Conductors and 0.25 in. (6 mm) Ferrule Ends
	Auxiliary Switches (-xxB-2 Models)	48 in. (1.2 m) UL 758 Type AWM Halogen Free Cable with 18 AWG (0.85 mm^2) Conductors and 0.25 in. (6 mm) Ferrule Ends
Conduit Connections		Integral 1/2 in. (13 mm) Threaded Conduit Connectors
Fluid Temperature Limits	**VG12x5 and VG18x5 Series**	-22 to 212°F (-30 to 100°C), Not Rated for Steam Service
	VG12x5 and VG18x5 Series with M9000-561 Thermal Barrier Installed	-22 to 284°F (-30 to 140°C) water; 15 psig (103 kPa) at 250°F (121°C) Saturated Steam
Ambient Conditions	**Standard Operating**	-22 to 140°F (-30 to 60°C); 90% RH Maximum, Noncondensing
	Storage	-40 to 185°F (-40 to 85°C); 95% RH Maximum, Noncondensing
Enclosure Rating		NEMA 2 (IP54) for all Mounting Directions

VA9203-Bxx-x Series On/Off Electric Spring Return Actuator (Part 3 of 3)

Compliance	**United States**	UL Listed, CCN XAPX, File E27734; to UL 60730-1A: 2003-08, Ed. 3.1, Automatic Electrical Controls for Household and Similar Use; and UL 60730-2-14: 2002-02, Ed. 1, Part 2 Particular Requirements for Electric Actuators Plenum Rated (UL 2043). Suitable for use in other environmental air space (plenums) in accordance with Section 300.22 (C) of the National Electric Code
	Canada	UL Listed, CCN XAPX7, File E27734; to UL 60730-1:02-CAN/CSA: July 2002, 3rd Ed., Automatic Electrical Controls for Household and Similar Use; and CSA C22.2 No. 24-93 Temperature Indicating and Regulating Equipment
CE	**Europe**	CE Mark – Johnson Controls declares that this product is in compliance with the essential requirements and other relevant provisions of the EMC Directive 2004/108/EC and the Low Voltage Directive 2006/95/EC.
	Australia and New Zealand	RCM Mark, Australia/NZ Emissions Compliant
Shipping Weight	**-xxA Models**	2.0 lb (0.9 kg)
	-xxB Models	2.4 lb (1.1 kg)

The performance specifications are nominal and conform to acceptable industry standards. For application at conditions beyond these specifications, consult the local Johnson Controls office. Johnson Controls, Inc. shall not be liable for damages resulting from misapplication or misuse of its products.

Building Technologies & Solutions
507 E. Michigan Street, Milwaukee, WI 53202

Johnson Controls® is a registered trademark of Johnson Controls.
All other marks herein are the marks of their respective owners. © 2025 Johnson Controls.

Published in U.S.A. www.johnsoncontrols.com