ZAPRASZAMY DO KONTAKTU:
ASTRA
www.astra-automatyka.pl
biuro@astra-automatyka.pl
tel. 22 723 92 29

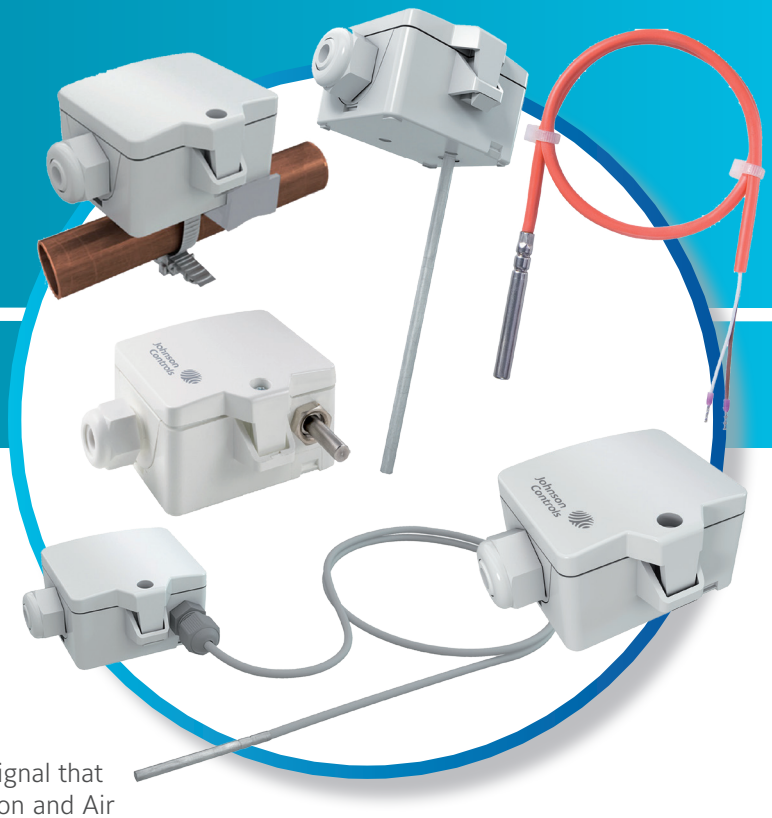

STS-6300

PLANT TEMPERATURE SENSOR

The STS-6300 series temperature sensors provide a passive signal that corresponds to the air or water temperature Heating, Ventilation and Air Conditioning (HVAC) applications.

They are passive resistive signal NTC K2, NTC K10, Pt100 or Pt1000 related to the sensed temperature.

The series consists of:

- **Duct/Immersion sensor** for measurement of air temperature and other gaseous media for HVAC applications (e.g. supply and exhaust ducts).
- **Cable sensor** for temperature measurement in HVAC applications. In conjunction with a **thermowell pocket** suitable for temperature measurement in duct applications. Designed for control and monitoring applications.
- **Outdoor temperature sensors** for measuring temperature in outdoor areas, in cold stores and greenhouses, production plants and warehouses. Designed for connecting to control and display systems.
- **Cable temperature sensors**: Sensor with hinged cover enclosure for temperature measurement of pipes and round surfaces. Spring loaded brass contact sensor.

FEATURES

- Wide range of mounting types and signal outputs
- Different length of tubes and wells for duct and immersion applications
- For immersion applications, well can be mounted before duct sensor is mounted
- IP54 ingress protection (except cable sensor)
- IP67 ingress protection for cable sensor

PLANT TEMPERATURE

STS-6300 PLANT TEMPERATURE SENSOR

DIMENSIONS

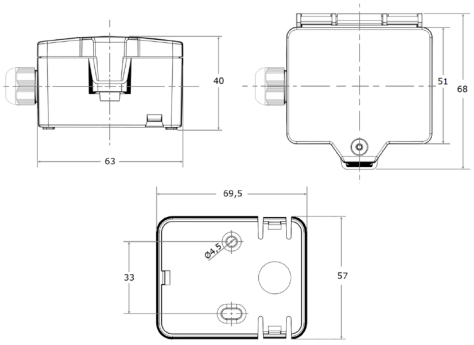

STS-63xx OUTDOOR TEMPERATURE SENSOR

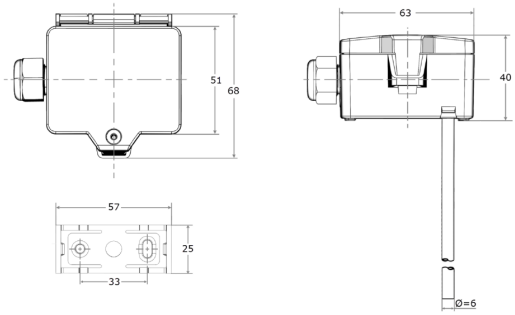

STS-63xx DUCT / IMMERSION TEMPERATURE SENSOR

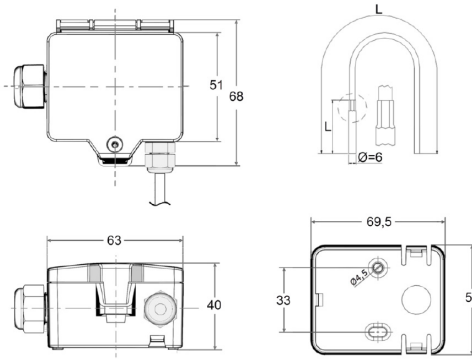

STS-63xx CABLE TEMPERATURE SENSOR

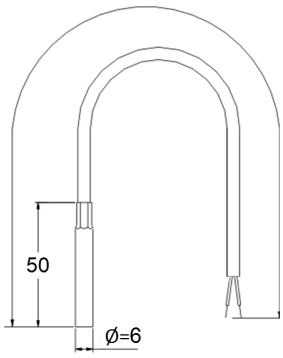

STS-63xx CABLE TEMPERATURE SENSOR

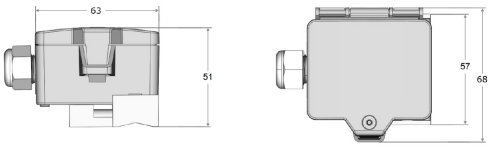

STS-63xx CONTACT TEMPERATURE SENSOR

STS-6300 PLANT TEMPERATURE SENSOR

ORDERING INFORMATION

CODES	OUTPUT	MOUNTING TYPE	LENGHT *(mm)*	TEMPERATURE RANGE
STS-6370D-A11	0...10 VDC	Duct / immersion	150	default setting: 0..+160°C selectable from 8 temperature ranges -50..+50 | -20..+80 | -15..+35 | -10..+120 | 0..+50 | 0..+100 | 0..+160 | 0..+250°C, adjustable at the transducer
STS-6370D-B11			200	
STS-6370D-C11			300	
STS-6370D-D11			446	
STS-6330D-A10	2K2 NTC		150	-50..+150°C
STS-6330D-B10			300	
STS-6330D-D10			450	
STS-6340D-A10	10K NTC		150	
STS-6340D-B10			200	
STS-6340D-C10			300	
STS-6340D-D10			450	
STS-6350D-A10	Pt100		150	
STS-6350D-B10			200	
STS-6350D-C10			300	
STS-6350D-D10			450	
STS-6360D-A10	Pt1000		150	
STS-6360D-B10			200	
STS-6360D-C10			300	
STS-6360D-D10			450	

PLANT TEMPERATURE

STS-6300 PLANT TEMPERATURE SENSOR

ORDERING INFORMATION

CODES	OUTPUT	MOUNTING TYPE	LENGHT *(mm)*	TEMPERATURE RANGE
STS-6370R-F01	00..10 V or 0..5 V, configurable via jumper, min. load 5 kΩ	Cable sensor	1.5 m cable lenght	default setting: 0..+160°C, selectable from 8 temperature ranges -50..+50 | -20..+80 | -15..+35 | -10..+120 | 0..+50 | 0..+100 | 0..+160 | 0..+250°C, adjustable at the transducer
STS-6330K-F00	2K2 NTC		2 m cable lenght	-35..+100 °C
STS-6340K-F00	10K NTC		2 m cable lenght	
STS-6360K-F00	Pt1000		1.5 m cable lenght	
STS-6370E-001	0..10 V or 0..5 V, configurable via jumper, min. load 5 kΩ	Outdoor	---	default setting: -50..+50°C, selectable from 8 temperature ranges -50..+50 | -20..+80 | -15..+35 | -10..+120 | 0..+50 | 0..+100 | 0..+160 | 0..+250
STS-6330E-000	2K2 NTC			-35 to +90°C
STS-6340E-000	10K NTC			
STS-6350E-000	Pt100			
STS-6360E-000	Pt1000			
STS-6370S-002	0..10 V or 0..5 V, configurable via jumper, min. load 5 kΩ	Strap-on	---	default setting: 0..+100 °C, selectable from 8 temperature ranges -50..+50 | -20..+80 | -15..+35 | -10..+120 | 0..+50 | 0..+100 | 0..+160 | 0..+250°C, adjustable at the transducer
STS-6330S-000	2K2 NTC			-35..+120 °C
STS-6340S-000	10K NTC			
STS-6350S-000	Pt100			
STS-6360S-000	Pt1000			
STS-6370C-E13	0..10 V or 0..5 V, configurable via jumper, min. load 5 kΩ	DUCT/ IMMERSION	50	default setting: 0..+160 °C selectable from 8 temperature ranges -50..+50 | -20..+80 | -15..+35 | -10..+120 | 0..+50 | 0..+100 | 0..+160 | 0..+250°C, adjustable at the transducer
STS-6340C-E10	10K NTC	Ceiling	50	-50..+15 °C
STS-6360C-E10	Pt1000	Ceiling	50	-50..+16 °C

PLANT TEMPERATURE

STS-6300 PLANT TEMPERATURE SENSOR

ORDERING INFORMATION

ACCESSORIES

CODES	LENGHT *(mm)*	MATERIAL	MOUNTING THREAD	PN
STS-6300W-E200	50	Brass/Copper	R 1/2"	PN16
STS-6300W-D200	80			
STS-6300W-G200	150			
STS-6300W-H200	200			
STS-6300W-I200	260			
STS-6300W-E300	50	Stainless steel	R 1/2"	PN40
STS-6300W-E400	50		G 1/2"	
STS-6300W-D300	80		R 1/2"	
STS-6300W-D400	80		G 1/2"	
STS-6300W-G300	150		R 1/2"	
STS-6300W-G400	150		G 1/2"	
STS-6300W-H300	200		R 1/2"	
STS-6300W-H400	200		G 1/2"	
STS-6300W-I300	260		R 1/2"	
STS-6300W-I400	260		G 1/2"	

STS-6300D-000	Duct Flange Kit for TS-63xx sensors